HRM Baseline Nov 2013_OV-6c Context Manage Unauthorized Absence (Business Process)
System Architect
Monday, October 28, 2013 2:22 PM

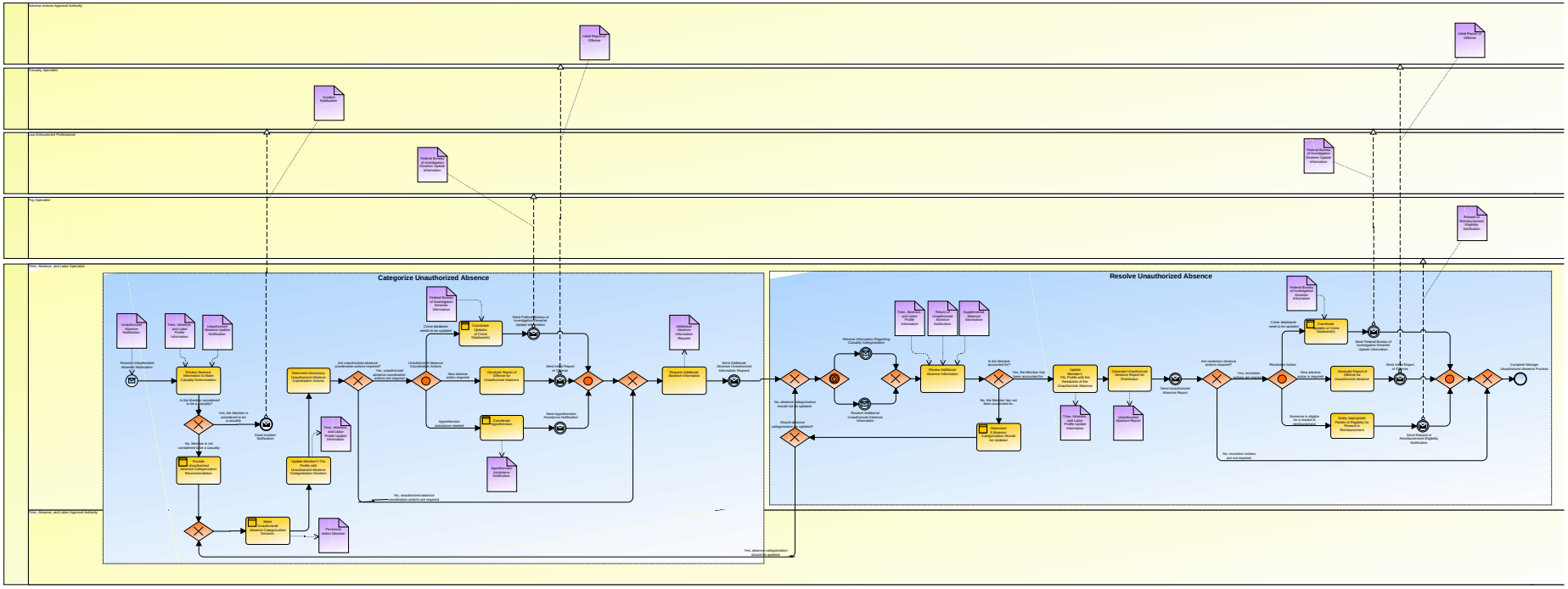
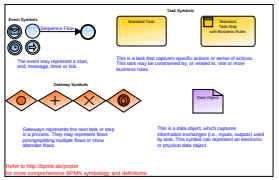
Business Process Model Legend